DEUTSCHER IMKERBUND E.V.

Breeding selection report
DE-12-3-16-2010-K

LANDESVERBAND SAARLÄNDISCHER IMKER E.V.

Tester of the queen:	Lensch, Armin, 66606 St. Wendel, DE-12-3, Apiary 4	
Breeder of the queen:	Lensch, Armin, 66606 St. Wendel, DE-12-3	
1a Studbook number:	**DE-12-3-16-2010-K**	
		Daughters of
Race line: -30	Sign: blue 31	Queen: 0.8%
Generation: 6	Hatch date: 7.6.2010	Workers: 0%

A. Pedigree

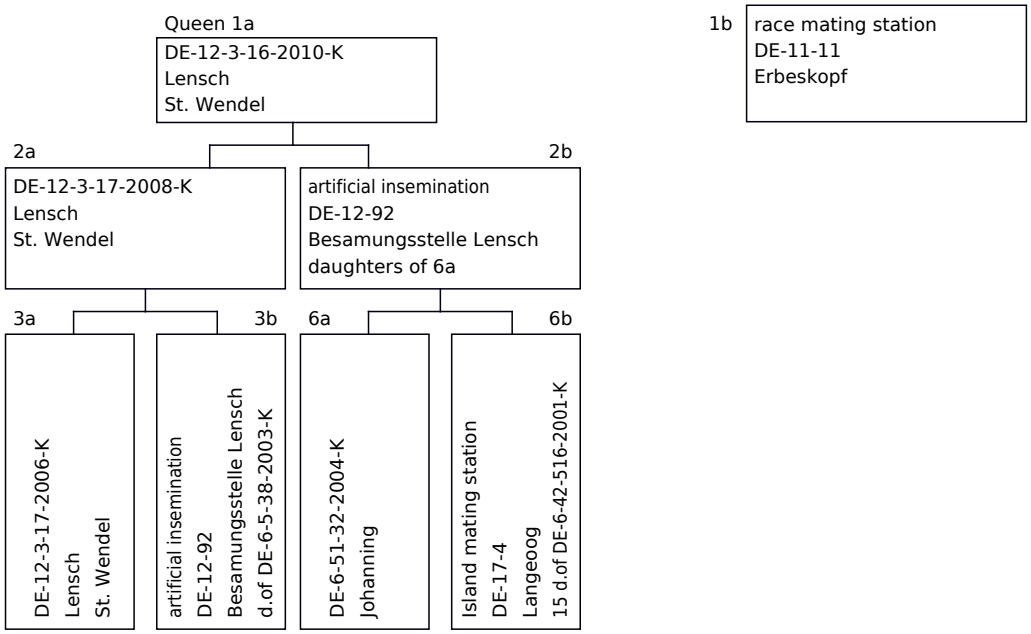

B. Own performance

	No. of the colony 9 W 8			comparable colonies at the apiary	
	kg	%	Ranking	number	Yield average kg
Performance test year	47.6	123.1	2	5	38.7

	Assessment*	Breeding values	Reliability
Total breeding value[1]	-	114	
Honey yield	-	110	0.33
Defensive behavior	3.90	111	0.52
Steadiness on comb	3.90	111	0.55
Swarming drive	4	111	0.35
Varroa	-	111	0.45
Performance index	-	0	
Robustness in winter	3.50		
Development in Spring	3.90		
Colony strength	3.90		

70% 100% 170%

[1]In accordance with the resolution of the breeder convention of 9th April 2011, for the total breeding value, Varroa tolerance is weighted by 40% and honey yield, gentleness, calmness during inspection, and swarming tendency are each weighted by 15%.

C. Performance of the sisters

See page 2

D. Body features, see appendix

See attached characteristic documents:

E. Results

Class Av

Selected for Varroa tolerance. Suitable for breeding with no restrictions; suitable for use as a 4a colony at frequently visited mating stations.

07.06.2012

For the correctness DE-12

Breeding selection report DE-12-3-16-2010-K

Page 2

Performance of the sisters

Amount of checked sisters: 12

Studbook number	Tester of the queen	Apiary	Total breeding value	Yield kg	Breeding Value Honey	Defensive behavior	Breeding Value Defensive Behavior	Calmness during inspection	Breeding Value Calmness during inspection	Swarming drive	Breeding Value Swarming drive	Varroa-index	Performance ndex
DE-12-3-3-2010	DE-12-3	1	104	33.2	103	3.7	102	3.7	101	4	99	106	
DE-12-3-6-2010	DE-12-3	1	105	18.5	89	3.7	100	3.7	97	4	92	117	
DE-12-3-9-2010	DE-12-3	1	96	23.5	94	3.7	100	3.7	100	4	99	95	
DE-12-3-10-2010	DE-12-3	1	108	44.4	114	3.8	106	3.7	106	4	106	104	
DE-12-3-24-2010	DE-12-3	2	93	65.4	94	3	94	3.5	94	4	94	97	
DE-12-3-25-2010	DE-12-3	2	112	94	122	3.8	119	3.8	120	4	116	95	
DE-12-3-26-2010	DE-12-3	2	99	55.7	84	3	88	3.2	85	4	85	119	
DE-12-3-12-2010	DE-12-3	4	102	47.1	106	3.7	98	3.7	98	4	106	101	
DE-12-3-13-2010	DE-12-3	4	90	17.7	82	3.6	90	3.6	89	3	81	103	
DE-12-3-15-2010	DE-12-3	4	117	52.1	112	3.8	105	3.8	103	4	105	124	
DE-12-3-16-2010-K	DE-12-3	4	114	47.6	110	3.9	111	3.9	111	4	111	111	
DE-12-3-17-2010	DE-12-3	4	85	28.8	91	3.7	96	3.7	98	2.5	89	80	