Breeding selection report
DE-16-325-4376-2020-K

Tester of the queen:	Lehr, Ingo, 98617 Utendorf, DE-16-358, Apiary 1	
Breeder of the queen:	Reps, Thomas, 98547 Christes, DE-16-325	
1a Studbook number:	**DE-16-325-4376-2020-K**	
Race line:	Sign: blue 85	Daughters of Queen: 14.3%
Generation:	Hatch date:	Workers: 0.9%

A. Pedigree

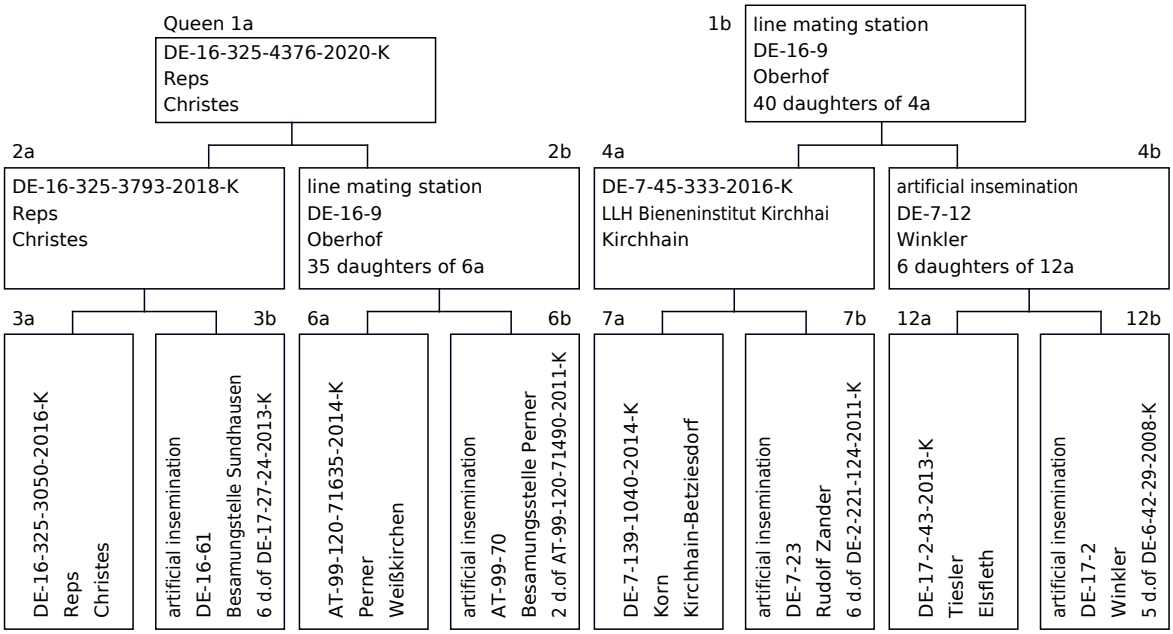

B. Own performance

	No. of the colony			comparable colonies at the apiary	
	kg	%	Ranking	number	Yield average kg
Performance test year	56.6	136.4	2	6	41.5

	Assessment*	Breeding values	Reliability
Total breeding value[1]	-	120	
Honey yield	-	122	0.5
Defensive behavior	4	122	0.58
Steadiness on comb	3.50	118	0.57
Swarming drive	4	119	0.47
Varroa	-	109	0.55
Performance index	-	123	0.5
Robustness in winter			
Development in Spring			
Colony strength	3		

70% 100% 170%

[1]In accordance with the resolution of the breeder convention of 9th April 2011, for the total breeding value, Varroa tolerance is weighted by 40% and honey yield, gentleness, calmness during inspection, and swarming tendency are each weighted by 15%.

C. Performance of the sisters

See page 2

D. Body features, see appendix

See attached characteristic documents:

E. Results

Class Av

Selected for Varroa tolerance. Suitable for breeding with no restrictions; suitable for use as a 4a colony at frequently visited mating stations.

10.01.2023

For the correctness DE-16

Breeding selection report DE-16-325-4376-2020-K

Page 2

Performance of the sisters

Amount of checked sisters: 8

Studbook number	Tester of the queen	Apiary	Total breeding value	Yield kg	Breeding Value Honey	Defensive behavior	Breeding Value Defensive Behavior	Calmness during inspection	Breeding Value Calmness during inspection	Swarming drive	Breeding Value Swarming drive	Varroa-index	Performance ndex
DE-16-325-4774-2020	DE-16-325	9	119		125		118		116		118	108	122
DE-16-325-4775-2020	DE-16-325	9	118		125		117		115		118	106	122
DE-16-325-4776-2020	DE-16-325	9	116		119		118		117		117	103	120
DE-16-325-4777-2020	DE-16-325	9	118		121		116		115		117	108	120
DE-16-325-4778-2020	DE-16-325	9	118		116		115		114		116	111	118
DE-16-325-4379-2020-K	DE-16-336	12	124		125		126		125		121	111	128
DE-16-325-4534-2020	DE-16-337	11	115		122		114		112		116	104	118
DE-16-325-4376-2020-K	DE-16-358	1	120	56.6	122	4	122	3.5	118	4	119	109	123